Honeywell | Honeywell Sensing and Productivity Solutions

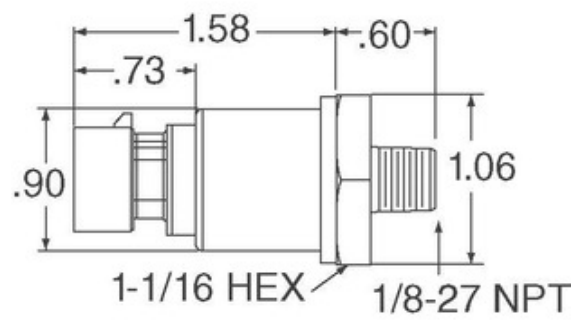

Image may be representation. See specifications for product details.

MLH500PSG06C

Part Number:	MLH500PSG06C
Manufacturer/Brand:	Honeywell Sensing and Productivity Solutions
Product description	SENSOR SEALED GAUGE 0-500 PSI
Datasheets:	1.MLH500PSG06C.pdf 2.MLH500PSG06C.pdf
RoHs Status	Lead free / RoHS Compliant
Ship From	Hong Kong
Shipment Way	DHL/Fedex/TNT/UPS/EMS

REQUEST FOR QUOTATION

Specifications of MLH500PSG06C

PART NUMBER	MLH500PSG06C
MANUFACTURER	Honeywell Sensing and Productivity Solutions
DESCRIPTION	SENSOR SEALED GAUGE 0-500 PSI
LEAD FREE STATUS / ROHS STATUS	Lead free / RoHS Compliant
DATA SHEET	1.MLH500PSG06C.pdf 2.MLH500PSG06C.pdf
VOLTAGE - SUPPLY	8 V ~ 30 V
TERMINATION STYLE	DIN
SUPPLIER DEVICE PACKAGE	-
SERIES	MLH
PRESSURE TYPE	Sealed Gauge
PORT STYLE	Threaded
PORT SIZE	Male - 1/8" (3.18mm) NPT
PACKAGE / CASE	Cylinder, Metal
OUTPUT TYPE	Analog Voltage
OUTPUT	1 V ~ 6 V
OPERATING TEMPERATURE	-40°C ~ 125°C
OPERATING PRESSURE	500 PSI (3447.38 kPa)
MOISTURE SENSITIVITY LEVEL (MSL)	1 (Unlimited)
MAXIMUM PRESSURE	1500 PSI (10342.14 kPa)
LEAD FREE STATUS / ROHS STATUS	Lead free / RoHS Compliant
FEATURES	Amplified Output, Temperature Compensated
DETAILED DESCRIPTION	Pressure Sensor 500 PSI (3447.38 kPa) Sealed Gauge Male - 1/8" (3.18mm) NPT 1 V ~ 6 V Cylinder, Metal
ACCURACY	±0.25%

Related Tags

- Honeywell Sensing and Productivity Solutions MLH500PSG06C
- MLH500PSG06C Distributor
- MLH500PSG06C Supplier
- MLH500PSG06C Price
- MLH500PSG06C Pictures
- MLH500PSG06C Image
- MLH500PSG06C PDF Datasheet
- MLH500PSG06C Download Datasheet
- MLH500PSG06C Datasheet
- MLH500PSG06C Stock
- Buy MLH500PSG06C
- Buy Honeywell Sensing and Productivity Solutions MLH500PSG06C
- Honeywell Sensing and Productivity Solutions MLH500PSG06C
- Honeywell Sensing and Productivity Solutions Supplier
- Honeywell Sensing and Productivity Solutions Distributor
- Honeywell Sensing and Productivity Solutions MLH500PSG06C
- HONEYWELL MLH500PSG06C
- Honeywell Sensing and Control EMEA MLH500PSG06C
- Honeywell Sensing and Productivity Solutions T&M MLH500PSG06C

Related Products

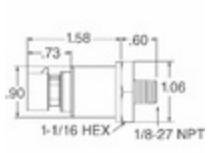

MLH500PSD01B
Manufacturers: Honeywell Sensing and Productivity Solutions
Description: MLH ALL METAL PRESS SENSE -ATF
In stock: Out stock
RFQ

MLH500PSL01A
Manufacturers: Honeywell Sensing and Productivity Solutions
Description: SENSOR AMP 500PSI .5-4.5VDC OUT
In stock: 10 pcs
RFQ

MLH500PSB09A
Manufacturers: Honeywell Sensing and Productivity Solutions
Description: SENSOR AMP 500PSI .5-4.5VDC OUT
In stock: 7 pcs
RFQ

MLH500PSL09A
Manufacturers: Honeywell Sensing and Productivity Solutions
Description: SENSOR AMP 500PSI .5-4.5VDC OUT
In stock: Out stock
RFQ

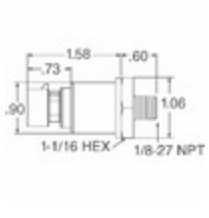

MLH500PSD09C
Manufacturers: Honeywell Sensing and Productivity Solutions
Description: SENSOR SEALED GAUGE 0-500 PSI
In stock: Out stock
RFQ

MLH500PSL06A
Manufacturers: Honeywell Sensing and Productivity Solutions
Description: SENSOR AMP 500PSI .5-4.5VDC OUT
In stock: 108 pcs
RFQ

MLH500PSM09A
Manufacturers: Honeywell Sensing and Productivity Solutions
Description: SENSOR AMP 500PSI .5-4.5VDC OUT
In stock: Out stock
RFQ

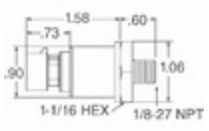

MLH500PSG01B
Manufacturers: Honeywell Sensing and Productivity Solutions
Description: SENSOR AMP 500PSIS 4-20MA OUT
In stock: Out stock
RFQ

MLH500PSL09B
Manufacturers: Honeywell Sensing and Productivity Solutions
Description: SENSOR AMP 500PSI 4-20MA OUT
In stock: Out stock
RFQ

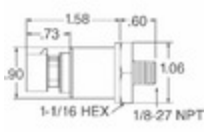

MLH500PSD13B
Manufacturers: Honeywell Sensing and Productivity Solutions
Description: MLH ALL METAL PRESS SENSE -ATF
In stock: Out stock
RFQ

MLH500PSB09C
Manufacturers: Honeywell Sensing and Productivity Solutions
Description: SENSOR AMP 500PSI 1-6VDC OUT
In stock: 10 pcs
RFQ

MLH500PSP06B
Manufacturers: Honeywell Sensing and Productivity Solutions
Description: SENSOR AMP 500PSI 4-20MA OUT
In stock: 43 pcs
RFQ

Copyright © 2020 Reliable Distributor of Electronic Components - Ocean-Components.com

E-mail: Info@Ocean-Components.com
Address: Room 2102, Connaught Commercial Building, 185 Wan Chai Rd, Wan Chai, Hong Kong