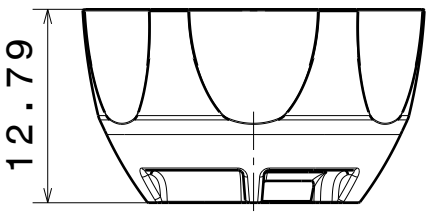

Front view

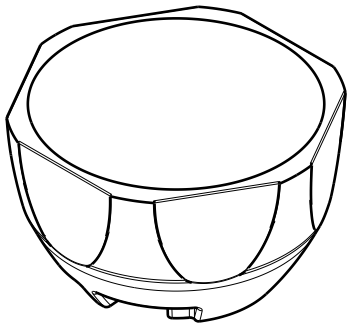

Isometric view

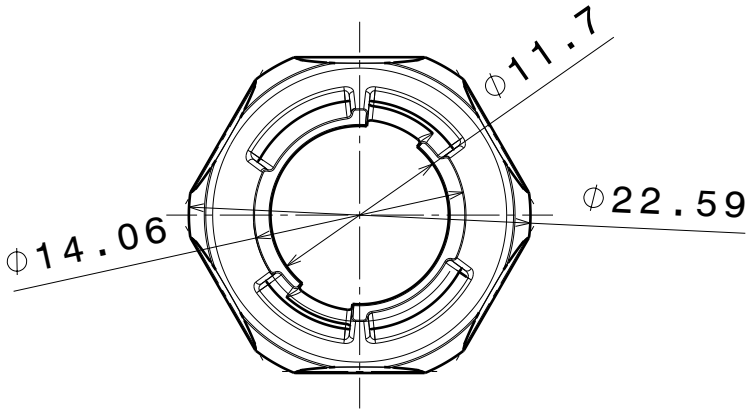

Bottom view

Tolerances if not otherwise shown
According to DIN ISO 2768-1
Linear measures:
Up to 30mm class M, otherwise class C.
According to DIN ISO 2768-2
Form and position: class L

Ledil Oy
Salorankatu 10
FIN 24240 SALO
Finland

THIRD ANGLE PROJECTION:

DRAWING TITLE

BRIDGET_UNI_Datasheet

SIZE	PART NUMBER
A4	-

SCALE	WEIGHT	SHEET
2:1	-	1/1