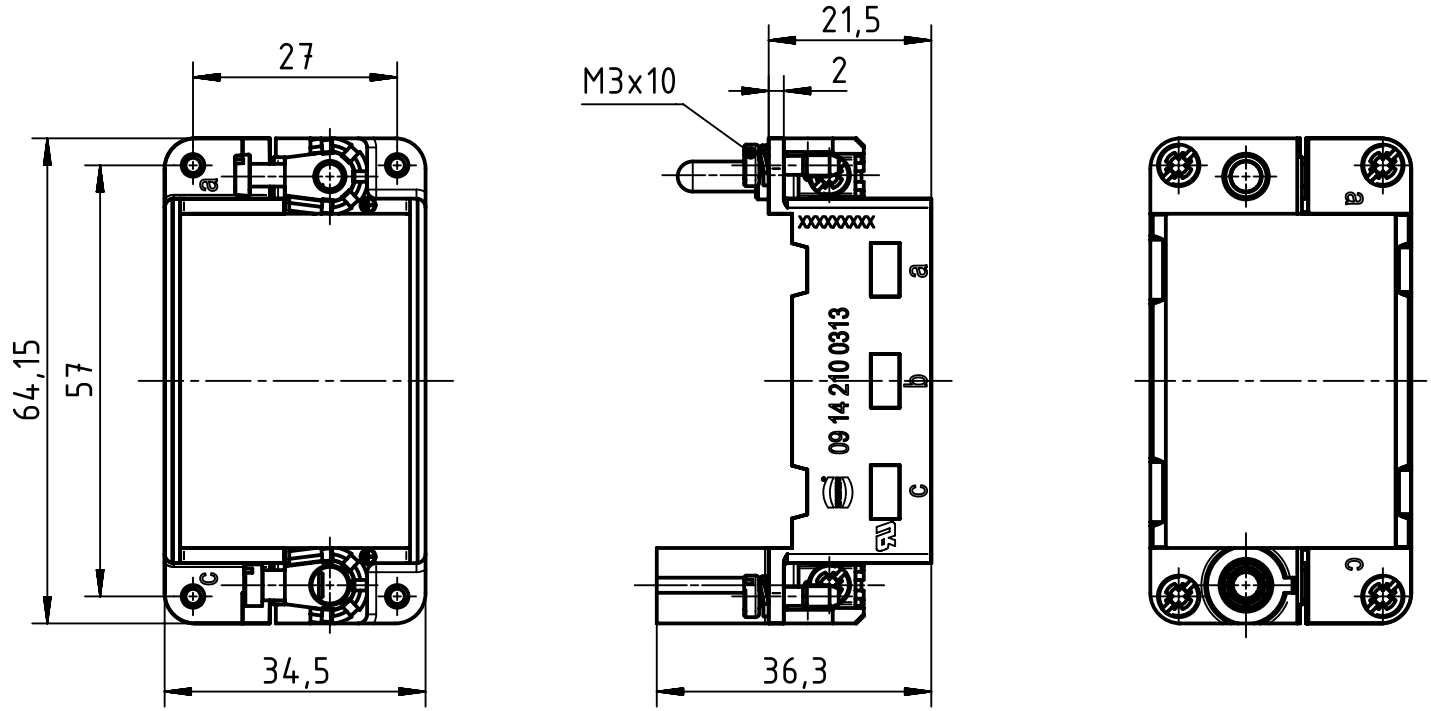

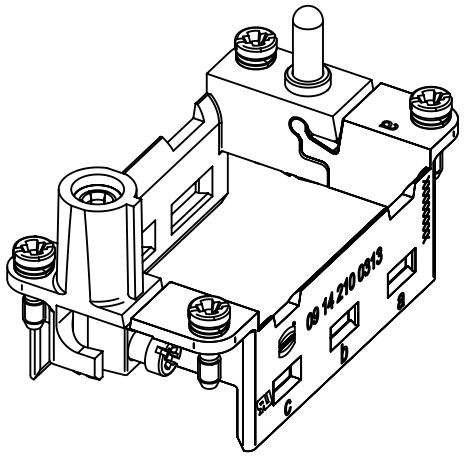

All Dimensions in mm Original Size DIN A4	Scale 1:1	Free size tol.		Ref. Sub.	
All rights reserved Department EL PD - DE	Created by HOLLERT	Inspected by WANGX	Standardisation TIEMANNA	Date 2015-08-31	State Final Release
HARTING Electric GmbH & Co. KG D-32339 Espelkamp	Title Hinged frame HMC 10B f. 3 modules (a..c)				Doc-Key / ECM-Nr. 100583140/UGD/008/B 500000093943
	Type TB	Number 09 14 210 0313		Rev. B	Page 1/1

A4