NOTES:
1. MATERIALS AND FINISHES
   BODY – BRASS, NICKEL PLATING
   CONTACT – PHOSPHOR BRONZE, GOLD PLATING
   INSULATOR – PTFE
2. ELECTRICAL:
   A. IMPEDANCE: 50 OHM
   B. FREQUENCY RANGE: DC 0–11 GHz
   C. DIELECTRIC WITHSTANDING VOLTAGE: 1500 VRMS, MIN.
3. MECHANICAL:
   A. DURABILITY: 500 CYCLES MIN.
   B. TEMPERATURE RANGE: – 65°C to +165°C
4. CRIMPED FERRULE
   HEX CRIMP SIZE .213"
5. CRIMPED CONTACT PIN
   HEX CRIMP SIZE .068"

THIRD ANGLE PROJ.

REVISIONS				
REV	DESCRIPTION	DATE	ECO	APPR
B	REDRAWN TO UPDATE FORMAT	31–Jul–08	47079	---

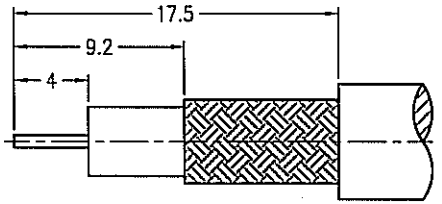

RECOMMENDED
CABLE STRIPPING DIM'S

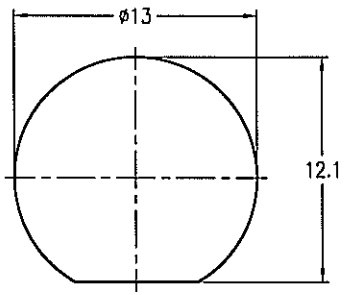

RECOMMENDED
MOUNTING HOLE

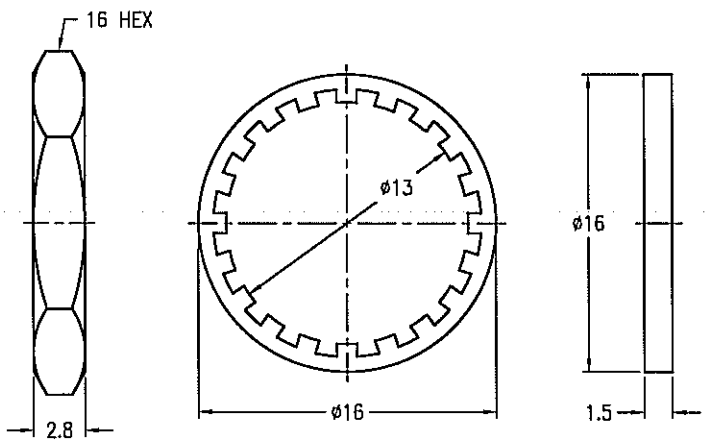

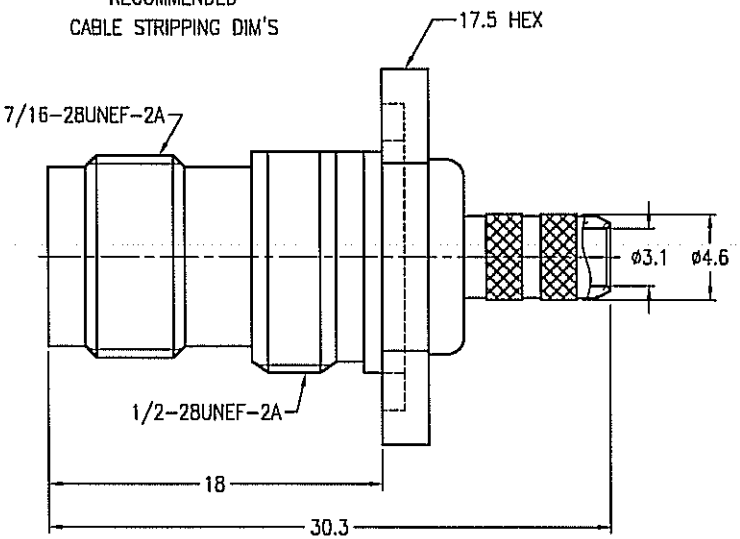

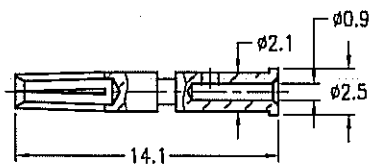

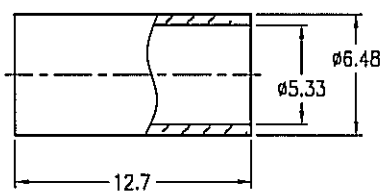

CUSTOMER OUTLINE DRAWING

ALL OTHER SHEETS ARE FOR INTERNAL USE ONLY

UNLESS OTHERWISE SPECIFIED, DIMENSIONS ARE IN METRIC AND TOLERANCES ARE:

0.5 – 6mm	6 – 30mm	30 – 120mm	ANGLES
±0.1mm	±0.2mm	± 0.3mm	±1°

NOTICE – These drawings, specifications, or other data (1) are, and remain the property of Amphenol Corp. (2) must be returned upon request; and (3) are confidential and not to be disclosed to any person other than those to whom they are given by Amphenol Corp. The furnishing of these drawings, specifications, or other data by Amphenol Corp., or to any other person to anyone for any purpose is not to be regarded by implication or otherwise in any manner licensing, granting rights or permitting such holder or any other person to manufacture, use or sell any product, process or design, patented or otherwise, that may in any way be related to or disclosed by said drawings, specifications, or other data.

MATERIAL

REFERENCE

FINISH

DRAWN	DATE
BETTY.L	05–Jun–00
ENGINEER	DATE
MARK.C	05–Jun–00
APPROVED	DATE
MARK.C	05–Jun–00

CAD FILE F:\DWG\T\6421A1\58U–50\NT3G–BSZ

TITLE
TNC BULKHEAD CRIMP JACK

SCALE: 2.5/1	SHEET 2 OF 2	
DWG SIZE	CODE ID	REV
B	74868	B

Amphenol RF
Danbury CT USA, Tainan Taiwan, Shenzhen China
www.amphenolrf.com

DRAWING NO. T6421A1–NT3G–58U–50

ITEM NO. 026421AAC58NA5F

PART NO. 031–5858–RFX