Alle Rechte vorbehalten/ *All rights reserved*

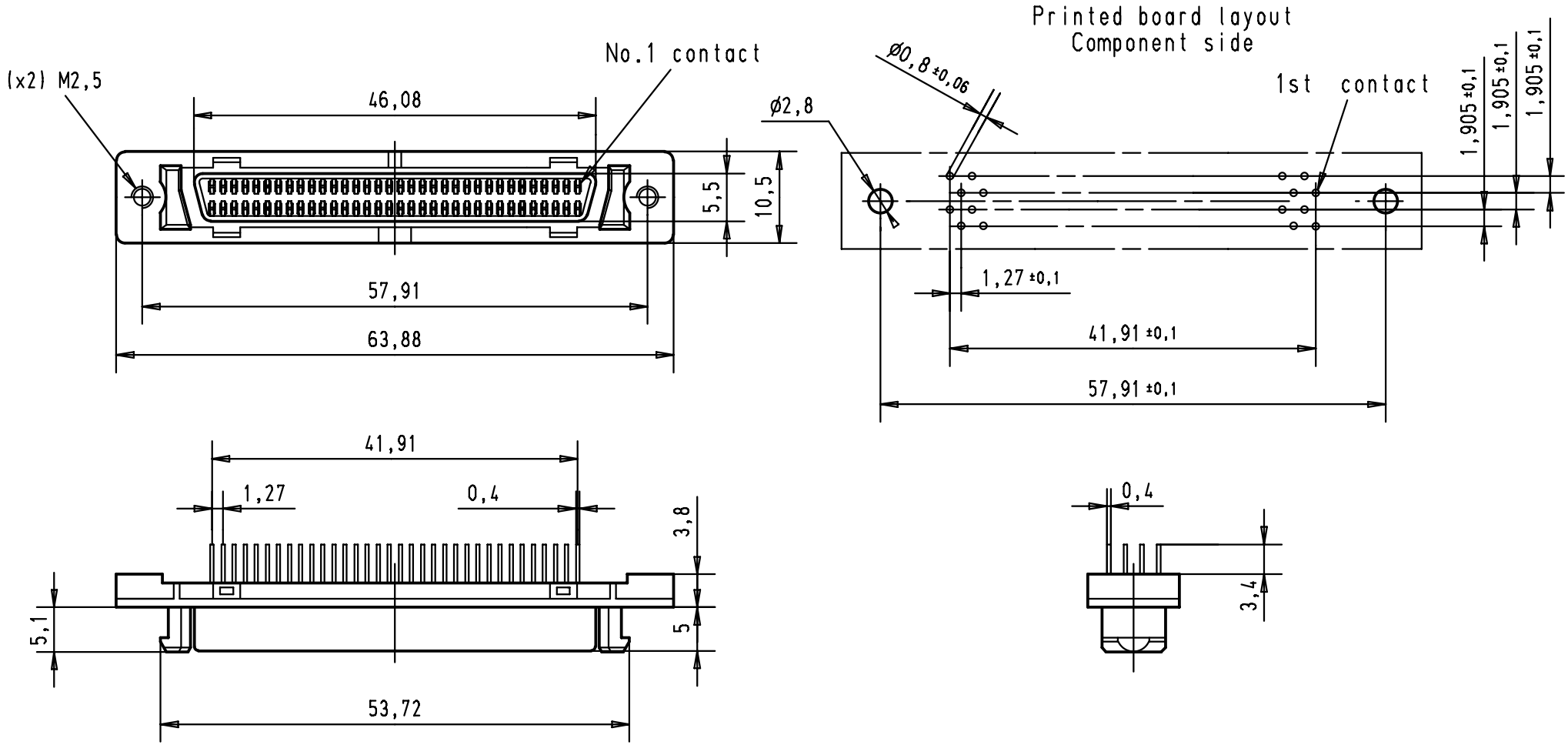

				Dat.	Name		har.mik® I/O pin/socket	Maßstab/ *Scale*
			Detail.	30-AUG-00	JB	All Dim. in mm	Female connector 68 poles	1,5:1
			Insp.			Orig. Size DIN A 4	with straight solder pins	
			Stand.				and fixed latching	
27941	30-AUG-00	JB	HARTING EURL				TB 60 01 068 5102	Blatt/*Page*
Mod.	Dat.	Name	F-95972 Paris				Sub.	1/1