THIS COPY IS PROVIDED ON A RESTRICTED BASIS AND IS NOT TO BE USED IN ANY WAY DETRIMENTAL TO THE INTERESTS OF PANDUIT CORP.

PANDUIT PART NO.	WEIGHT
WCM35CC	.03 LBS / [14.1 G]

NOTES:
1. SEE CURRENT CATALOG FOR ADDITIONAL PART NUMBER SUFFIXES TO INDICATE COLOR AND/OR PACKAGE QUANTITY.
2. THIS PRODUCT IS INTENDED TO BE USED WITH PANDUIT TYPE WCM35 RACEWAY.
3. DIMENSIONS IN PARENTHESIS ARE IN METRIC.

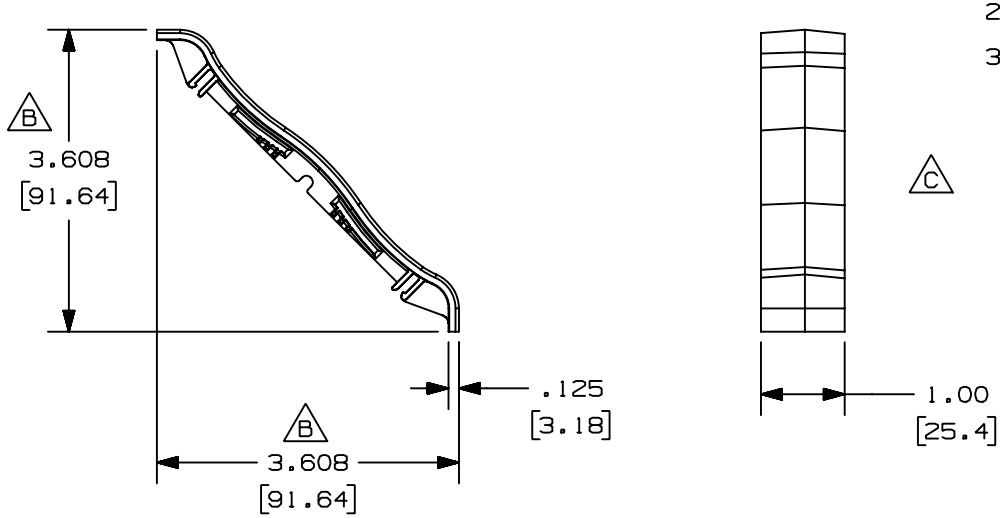

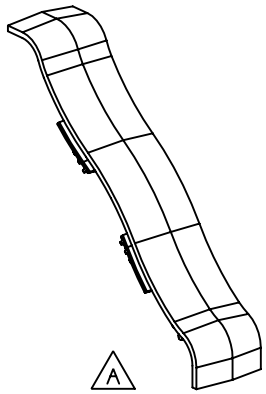

REV	DATE	BY	CHK	DESCRIPTION	ECN	CHK	CUST	SUP
-	--------	---	---	D. REMOVED VIEW	--------	---	---	
2	09-22-03	JHEP	BKR	C. REMOVED DIMENSION B. ADDED DIMENSION	38078-02	RGRO	RGRO	
-	--------	---	---	RELEASED TO PRODUCTION	--------	---	---	
1	10-31-02	JBN	BKR	A. REVISED GEOMETRY	38078-02	RGRO	RGRO	
R	05-07-02	JBN	CSH	DRAWING RELEASED				

CAD FILENAME/LAYERS: D38078BA_DC_WCM35CC_10B.PRT

PANDUIT CORP. TINLEY PARK, ILLINOIS

3.5 INCH COVE MOLDING
COVER COUPLER FITTING (WCM35CC)
CUSTOMER DRAWING

UNLESS OTHERWISE SPECIFIED, DIMENSIONAL TOLERANCES ARE:
(.X) ± (.XXX) ±.015 [.38]
(.XX)±.03 [.8] ANGLES ±

UNLESS OTHERWISE SPECIFIED, ALL DIMENSIONS ARE GIVEN IN INCHES, THIRD ANGLE PROJECTION.

DRAWN BY: JBN
DATE: 05-07-02
CHK'D: CSH
MAT'L: PVC
SCALE: NONE
DRAWING NO.: 38078-02
DWG SIZE: A