SW2009

Revision level		Revision Record	Changed	Date	Approved	Date
Drawing	Part					
01	-	SEE ECN# 011645	AAC	04/28/2011	AAC	04/28/2011

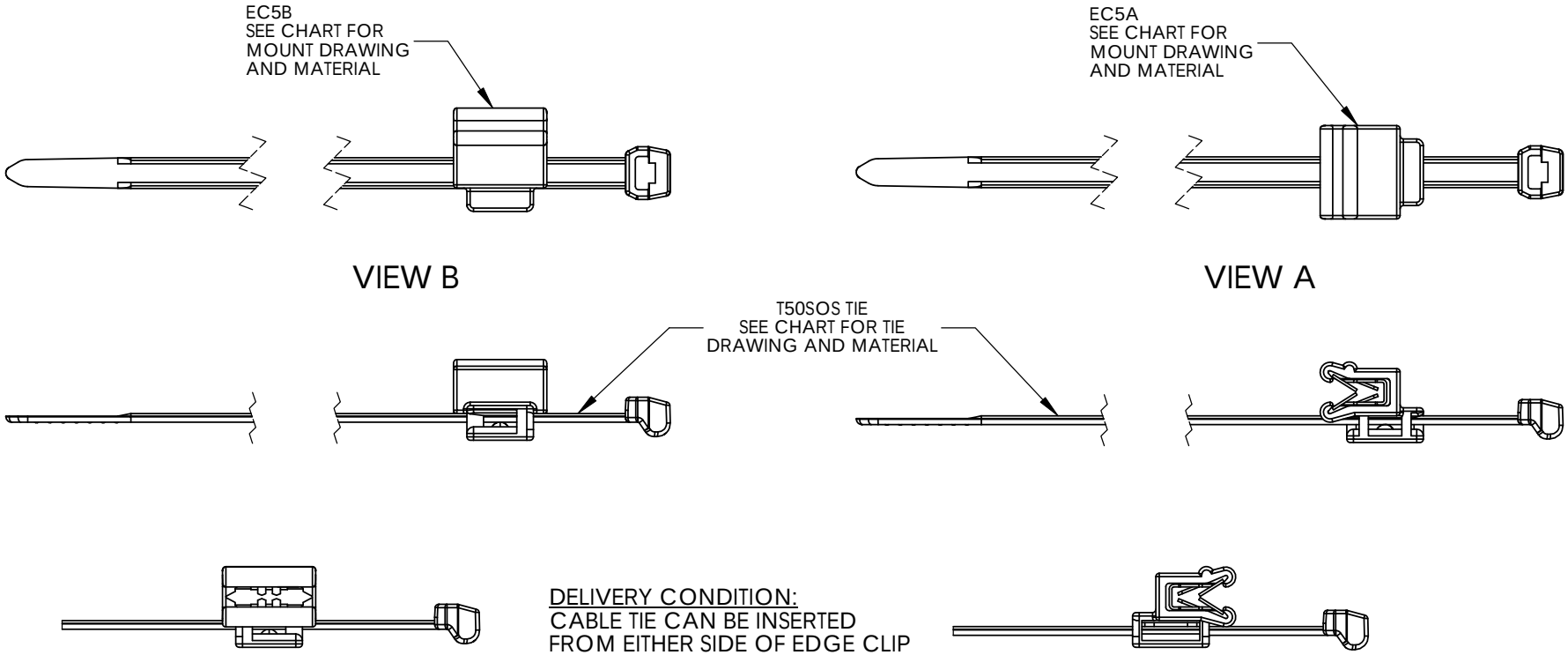

DELIVERY CONDITION:
CABLE TIE CAN BE INSERTED
FROM EITHER SIDE OF EDGE CLIP

TYPE	VIEW	BUNDLE RANGE	CABLE TIES		MOUNT	
			DRAWING	MATERIAL	DRAWING	MATERIAL
T50SOSEC5A	A	5 to 35	CT10-0737-001CST	PA66HS	CL10-0832-001CST	PA66HIRHS
T50SOSEC5B	B	5 to 35	CT10-0737-001CST		CL10-0832-001CST	PA66HIRHS

Material
SEE CHART

Units inches

Dimension without tolerances details to:
.XXXX = ±.0005
.XXX = ±.005
.XX = ±.01
.X = ±.03
None = ±.06
∠ = ±0.5°

The copyright of this drawing is reserved by HellermannTyton. It is issued on condition that it is not reproduced, copied, or disclosed to a third party, either wholly or in part, without the consent of HellermannTyton.

Drawn	AAC	11/09/2010
Approved	AAC	04/28/2011

HellermannTyton
North America
Email: corp@htamericas.com
Web: www.hellermann.tyton.com

Article/Type-No: T50SOSEC5

Title: T50SOSEC5 T50SOS CABLE TIE WITH EC5 MOUNT

Drawing-No: **CT10-0832-002CST**

Production : Phase

Scale: 1:1

Project Number: PRP10-0832

Format: AH

Sheet: 1/1

Product Number
Cross Reference Record

Uncontrolled Document

Pre-UNS Number System	(New) UNS Universal Number System	Customer Part Number
Product Number T50SOSEC5A	Product Number 156-00865	Product Number -

Reference Drawing Number: CT10-0832-002CST

Issued By:	(New) UNS Product Number	Issue Date:
HellermannTyton	**Universal Numbering System**	November 30, 2011

Product Number
Cross Reference Record

Uncontrolled Document

Pre-UNS Number System	(New) UNS Universal Number System	Customer Part Number
Product Number T50SOSEC5B	Product Number 156-00863	Product Number -

Reference Drawing Number: CT10-0832-002CST

Issued By:	(New) UNS Product Number	Issue Date:
HellermannTyton	**Universal Numbering System**	January 16, 2012